[illegible]

⚠ 警告

[illegible]

● [illegible]

[illegible] …EA818EA、EC、ED

⚠ 警告 [illegible]

● [illegible]

[illegible] 4 [illegible] 2X4 [illegible] (Fig,1)

Fig.1

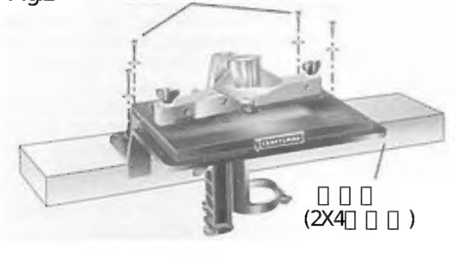

●□□□□□□□□□□□

1□ □□□□□□□□□□□□□□□□□□□□□□□□□□□□□□□

2□ □□□□□□□□□□□□□

□□□□□□□□□□□□□□□□□(□□□□□□□□□)□□□□

□□□□□□□□(Fig.2)□□□□□□□□□□□□□□□□□□□

3□ 2□□□□□□□□□□□□□□□□□□□□□□□□□□□□□□□□

□□□□□□□□□□□□□□□□□□(□□□□□□□□□□□□□

□□□□□□□□□□□□□□□□□□□□□)

□□□□□□□□□□□□□□□□□□□□□□□□□□□□□□

□□□□□□□□(Fig.3)

Fig.2

Fig.3

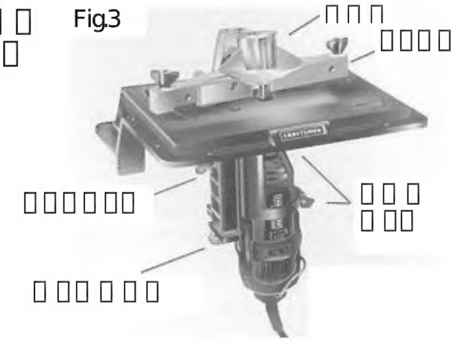

●□□□□□□□□□□□□□

1□ □□□□□□□□□□□□□□□□□□□□□□□□□□□□□□□

□□□□□□□□□□□□□□□□□□□□□□□□□□□□□□□□

□□□□□□□□□□□□□□□□□□□□□□□□□□□□

16mm□□□□□□□□□□□□□□□□□□□□□□□□□□

□□□□□□□□□□□□□□□□□□□□□□□□□□□(Fig.4)

2□ □□□□□□□□□□□□□□□□□□□□□□□□□□□

□□□□□□□□□□□□□□□□□□□□□□□□□□

□□□□□□□□

Fig.4

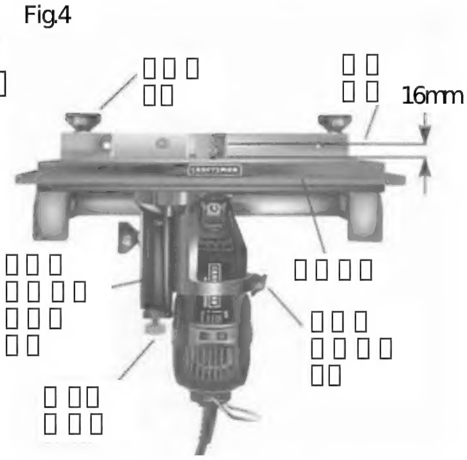

●□□□□□□□□□□□

□□□□□□□□□□□□□□□□□□□□□□□□□□□□(□□□/□□)

□□□□□□□□□□□□□□□□□□□□□□□□□

□□□□□□□□□□□□□□□□□□□□□□□□□□□(Fig.5)

Fig.5

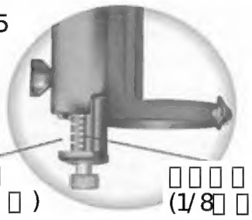

●□□□□□□□□□

□□□□□□□□□□□□□□□□□(□□□)□□□□□□□□□□□□□□□□□□□□□□□

□□

□□□□□□□□□□□□□□□□□□□□□□□□(□□□□□□□□□□)

□□□□□□□□□□□□□□□□□□□□□□□□□□□□(□□□□□□□□□□)□□□□□□

□□□□□□(Fig.6)

Fig.6

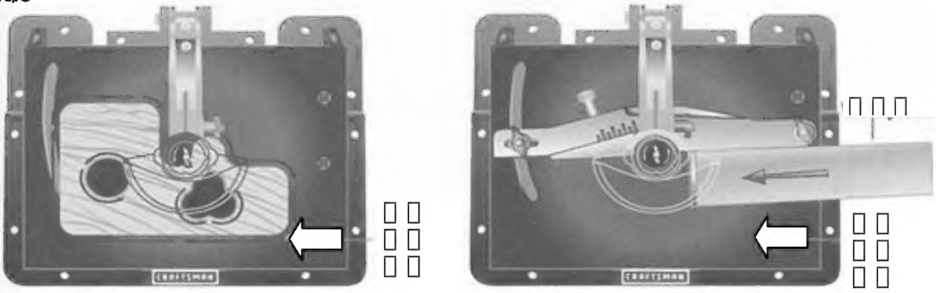

□□□□□□□□□□□□□
(□□□□□□□□□□)

□□□□□□□□□□□□□

● [illegible]

Fig.7

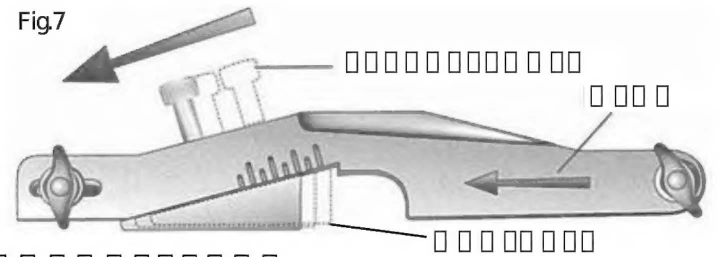

1. [illegible] (Fig.7)
2. [illegible]
3. [illegible] 6mmX50mmX200mm [illegible] Fig.8 [illegible]
4. [illegible] (Fig.4) [illegible]
5. [illegible] 5 [illegible]
   1.6mm [illegible]

Fig.8

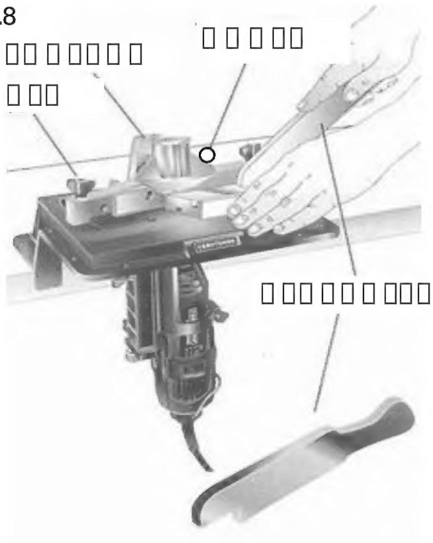

⚠ 警告 [illegible]

● [illegible]

1. [illegible]
2. [illegible]
3. [illegible]

[illegible]	[illegible]
EA818E-26 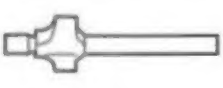	EA818E-25 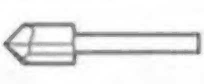
EA818E-27	EA818E-21
	EA818E-23 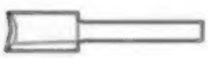

● [illegible]

Fig. 9

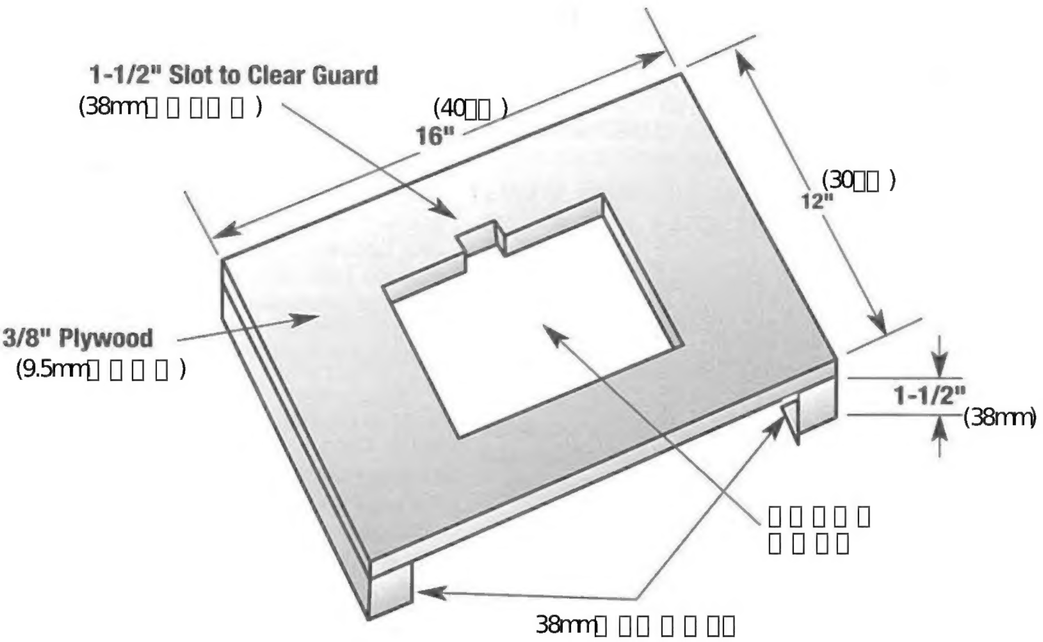

[illegible] 9.5mm [illegible] 13mm [illegible] 38mm [illegible] (Fig.9)

[illegible]
[illegible] 550-0012 [illegible]
[illegible] 06 [illegible] 6532-6226 [illegible] 06 [illegible] 6541-0929
[illegible] 03 [illegible] -3450-4003